IM100-LPA Assembly
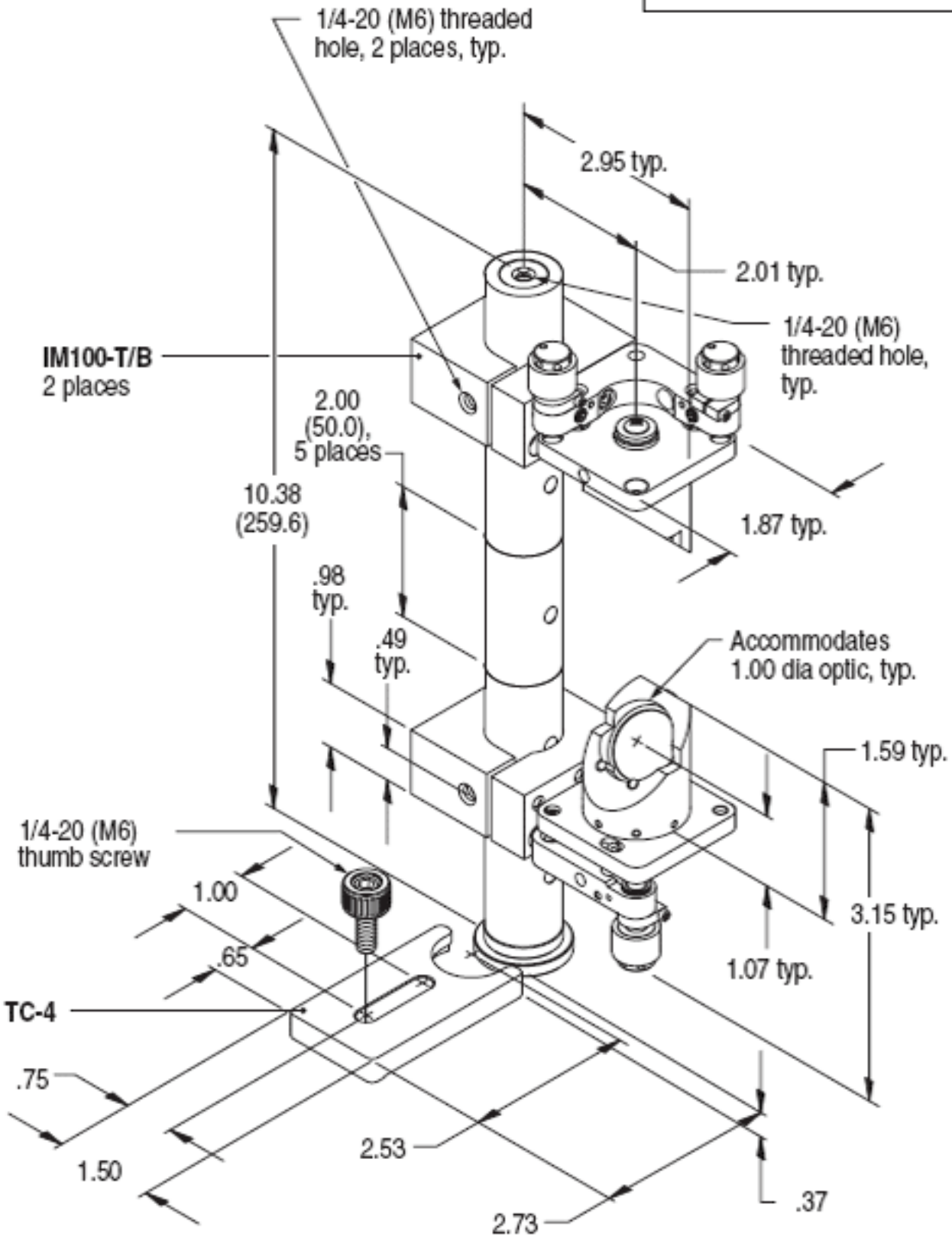
Dimensions in parentheses reflect metric assembly features